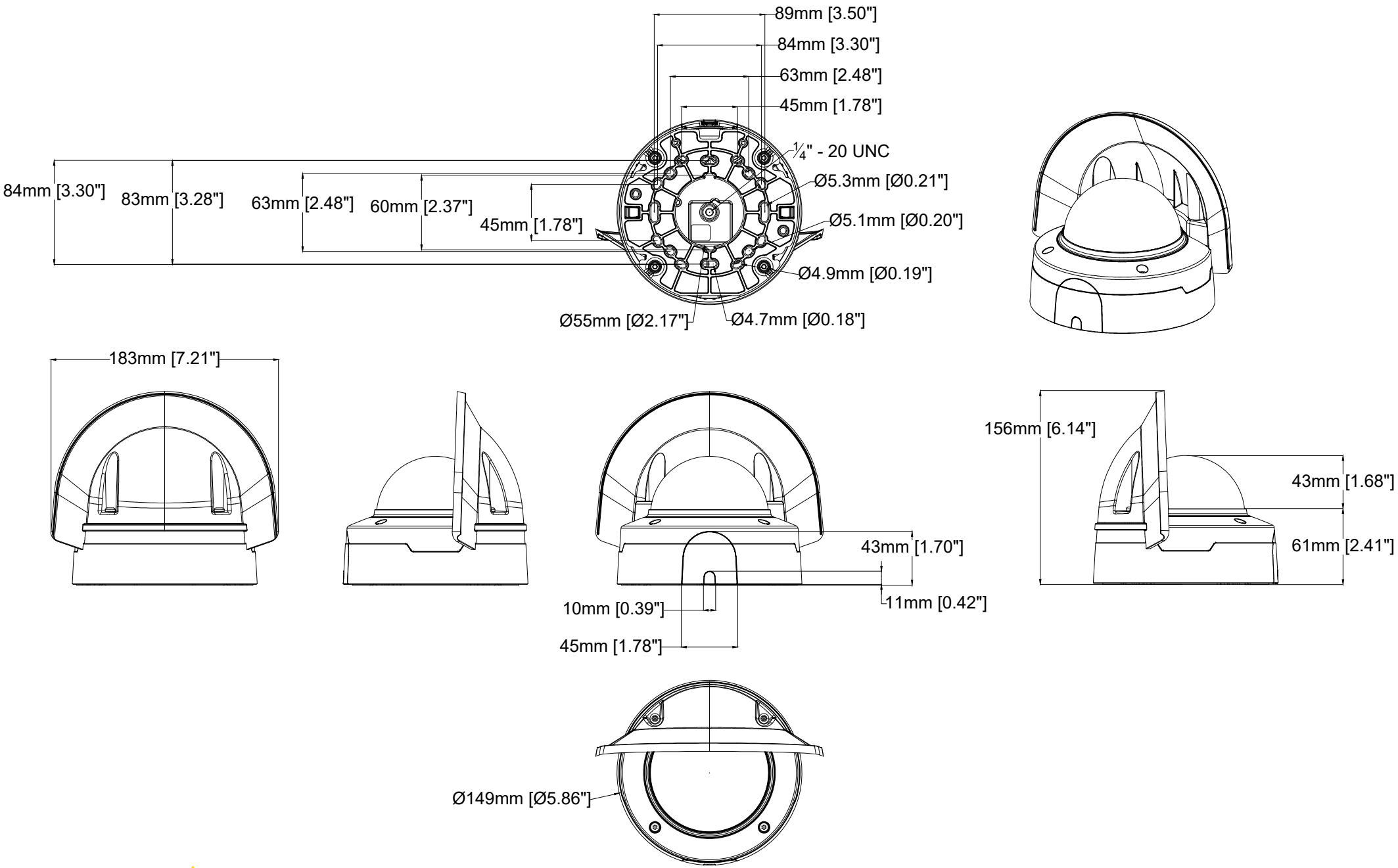

AXIS P3265-LVE-3 License Plate Verifier Kit

Revision	v.01	Revision date	2023-04-05
Paper size	A4	Release date	2023-04-05
Created by	MS	Scale	1:4