mm [inch]

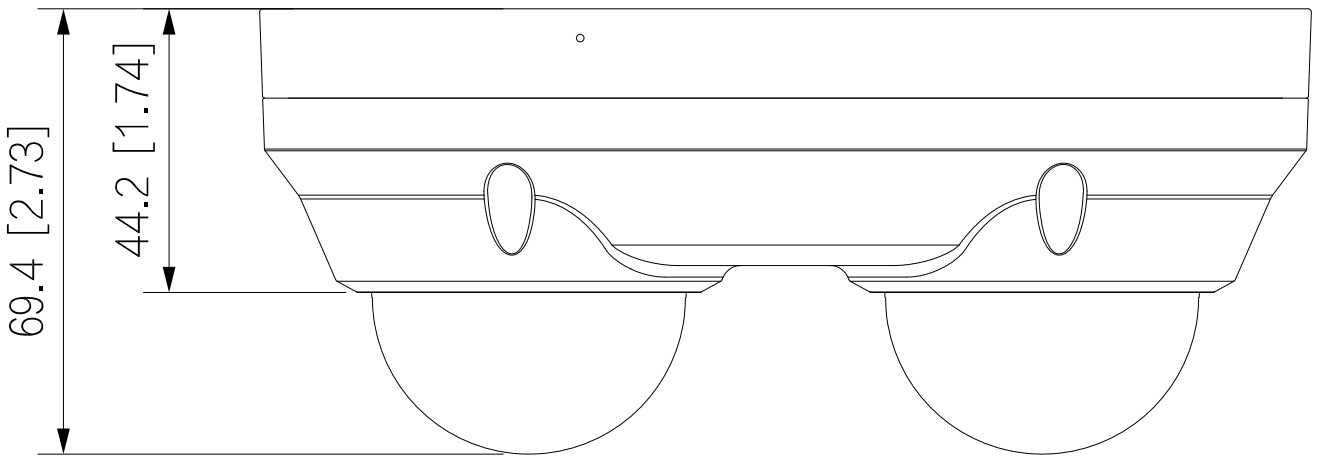
69.4 [2.73]
44.2 [1.74]

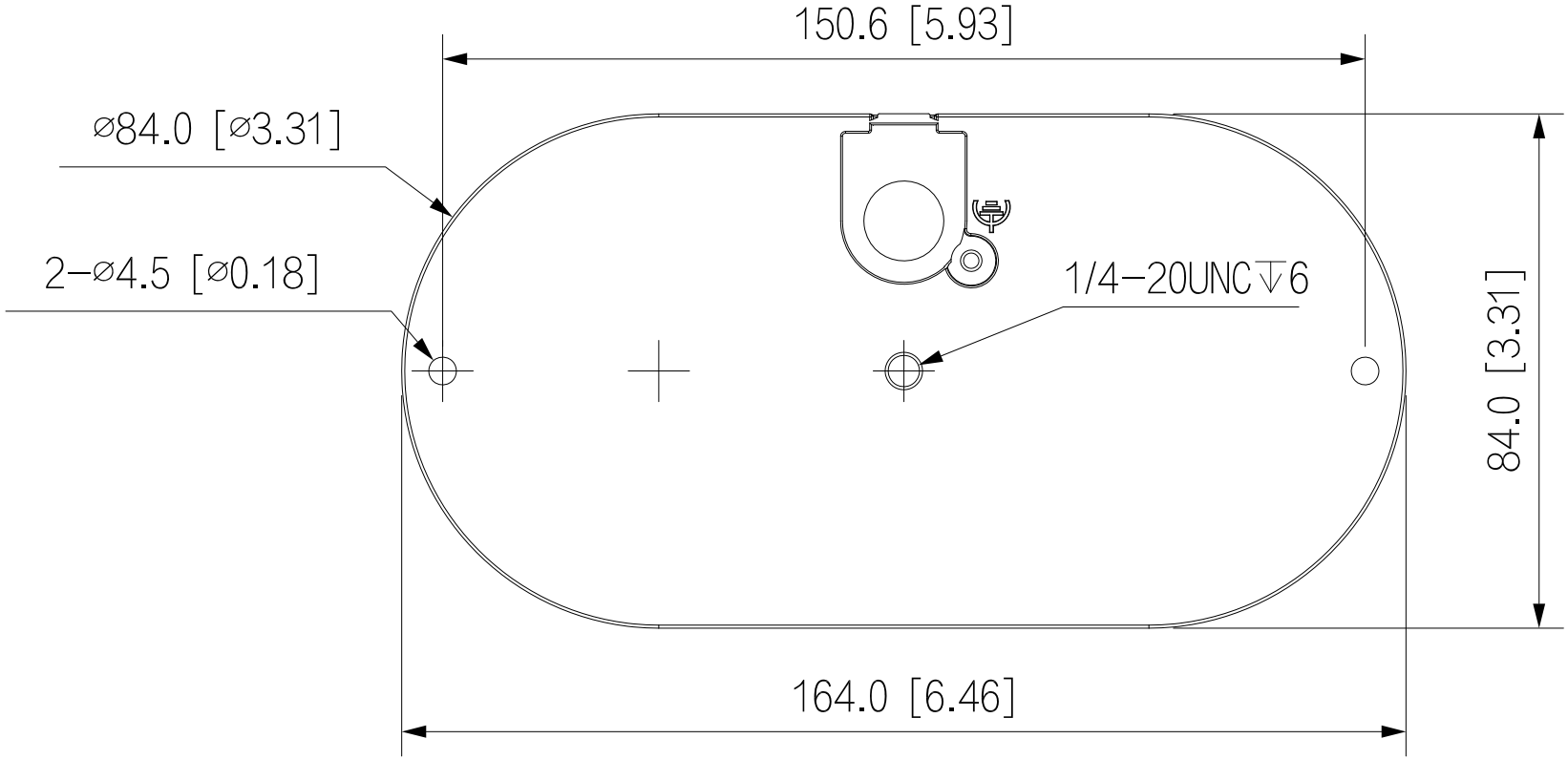
150.6 [5.93]
ø84.0 [ø3.31]
2−ø4.5 [ø0.18]
1/4−20UNC↧6
84.0 [3.31]
164.0 [6.46]