mm [inch]

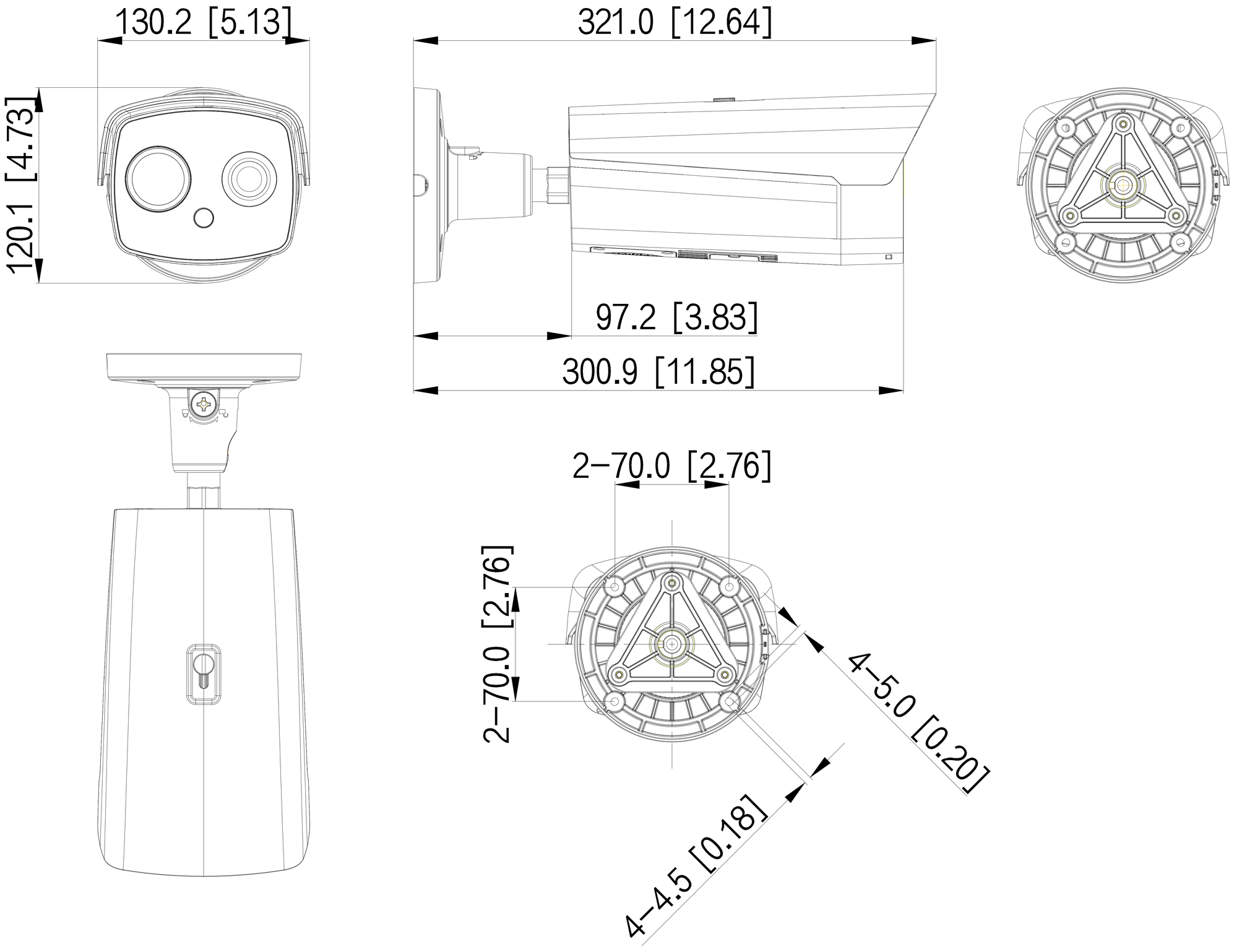
130.2 [5.13]
120.1 [4.73]
321.0 [12.64]
97.2 [3.83]
300.9 [11.85]
2−70.0 [2.76]
2−70.0 [2.76]
4−5.0 [0.20]
4−4.5 [0.18]