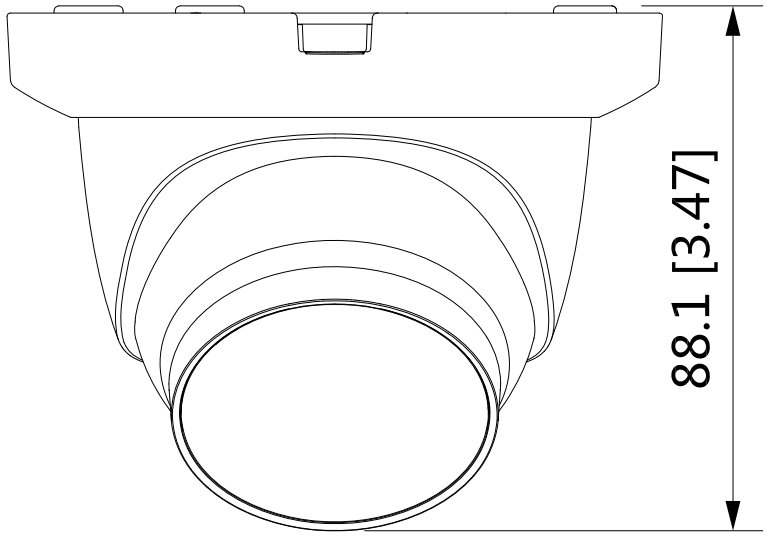
88.1 [3.47]

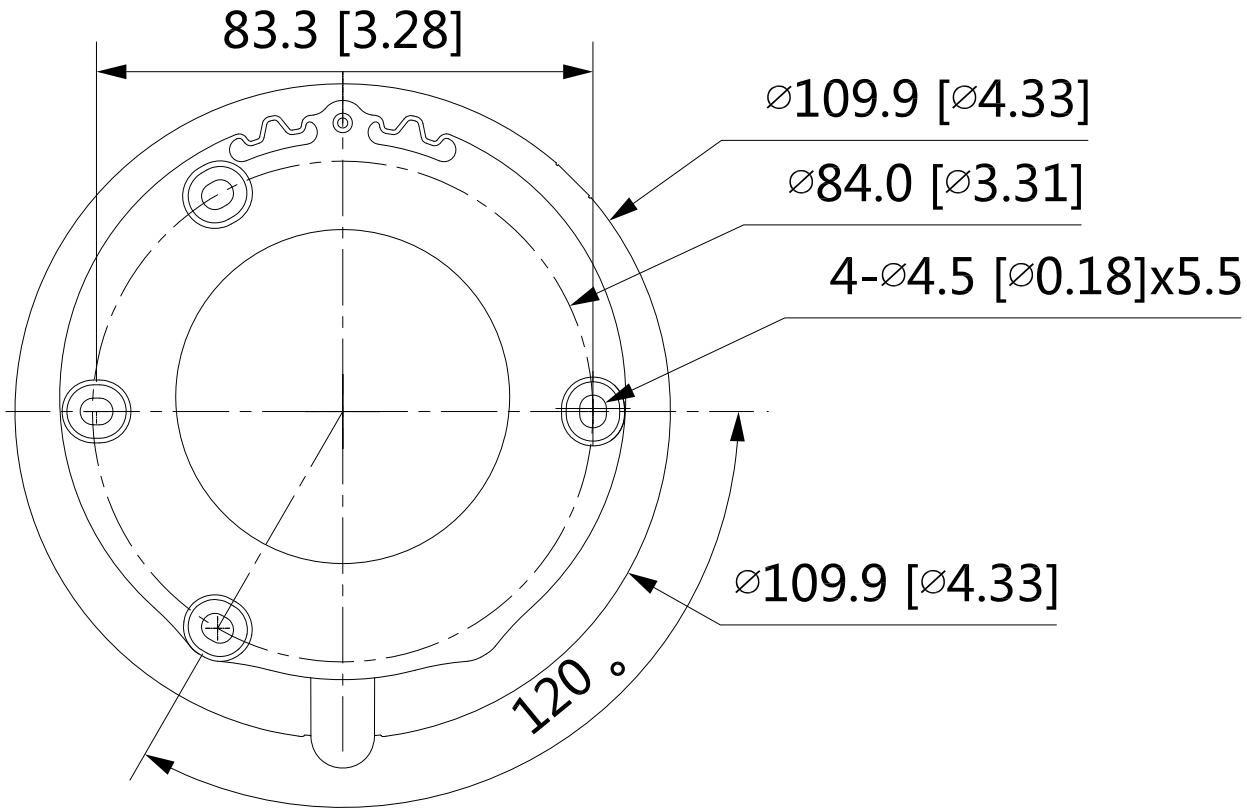
83.3 [3.28]
⌀109.9 [⌀4.33]
⌀84.0 [⌀3.31]
4-⌀4.5 [⌀0.18]x5.5
⌀109.9 [⌀4.33]
120 °