mm [inch]

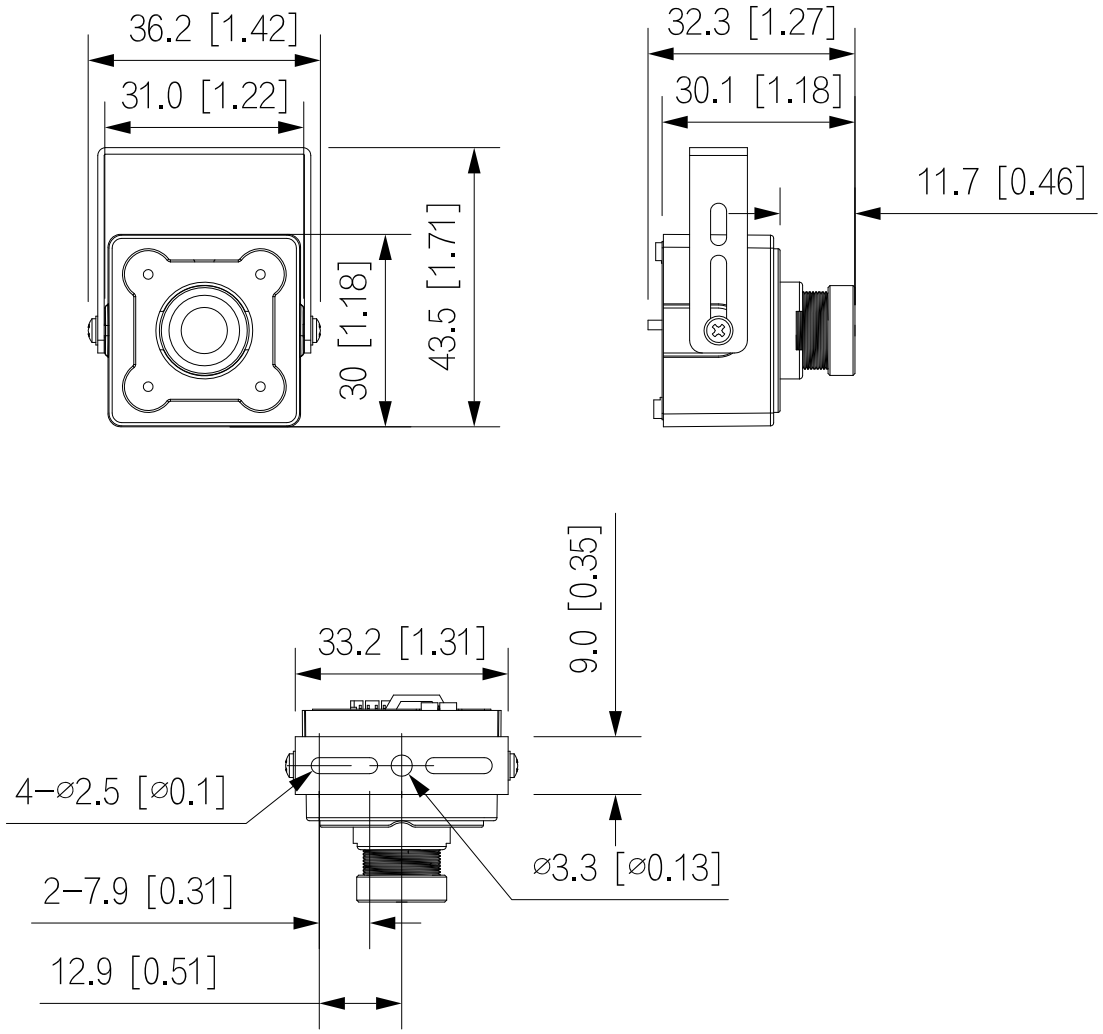
36.2 [1.42]
31.0 [1.22]
30 [1.18]
43.5 [1.71]
32.3 [1.27]
30.1 [1.18]
11.7 [0.46]
9.0 [0.35]
33.2 [1.31]
4−⌀2.5 [⌀0.1]
⌀3.3 [⌀0.13]
2−7.9 [0.31]
12.9 [0.51]