mm [inch]

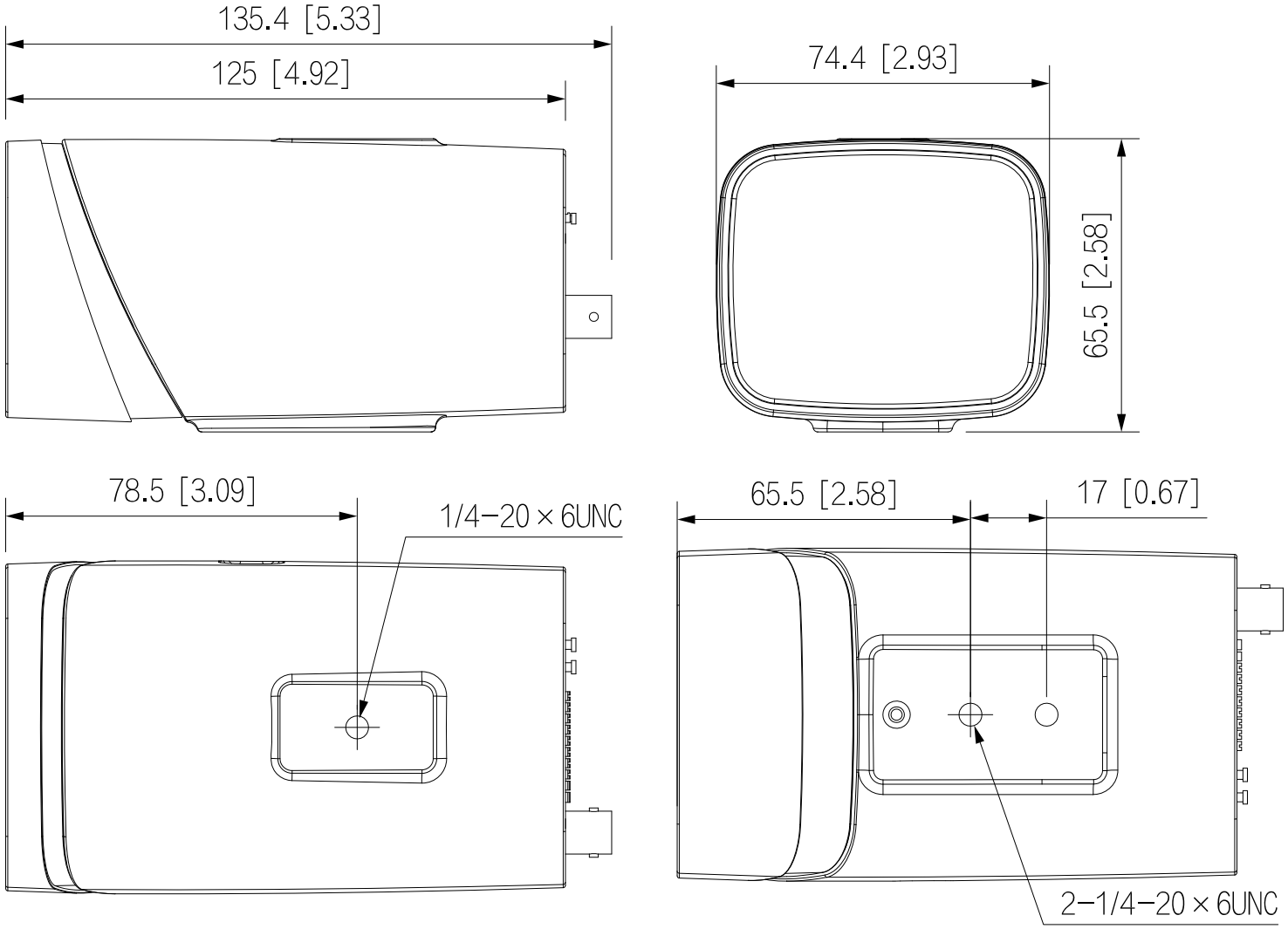
135.4 [5.33]
125 [4.92]
74.4 [2.93]
65.5 [2.58]
78.5 [3.09]
1/4−20 × 6UNC
65.5 [2.58]
17 [0.67]
2−1/4−20 × 6UNC