mm[inch]

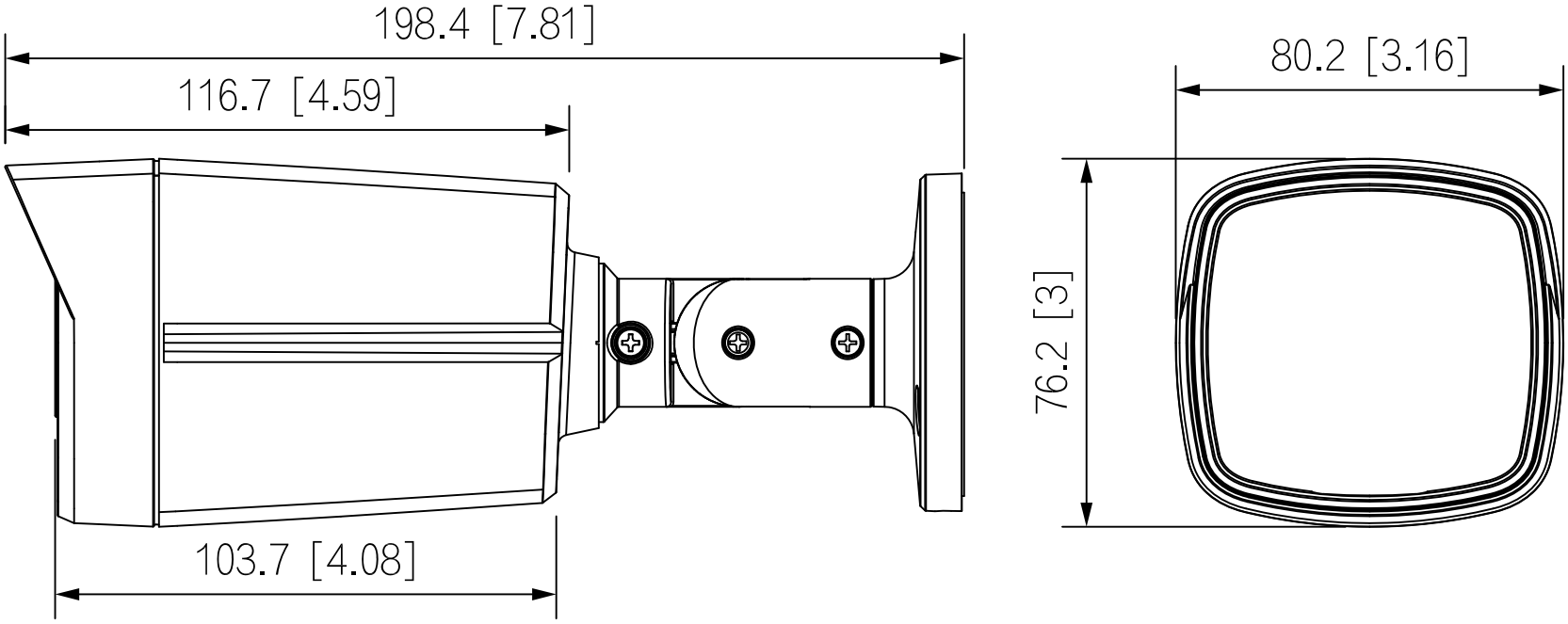
198.4 [7.81]
116.7 [4.59]
103.7 [4.08]
80.2 [3.16]
76.2 [3]

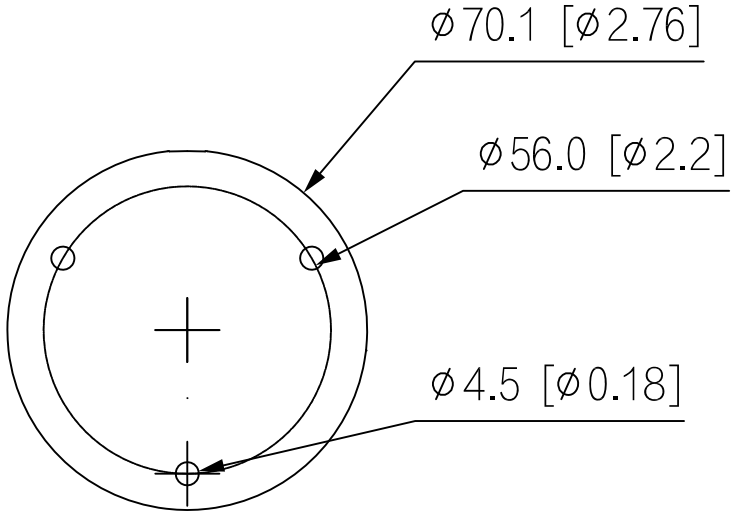
ø70.1 [ø2.76]
ø56.0 [ø2.2]
ø4.5 [ø0.18]