mm [inch]

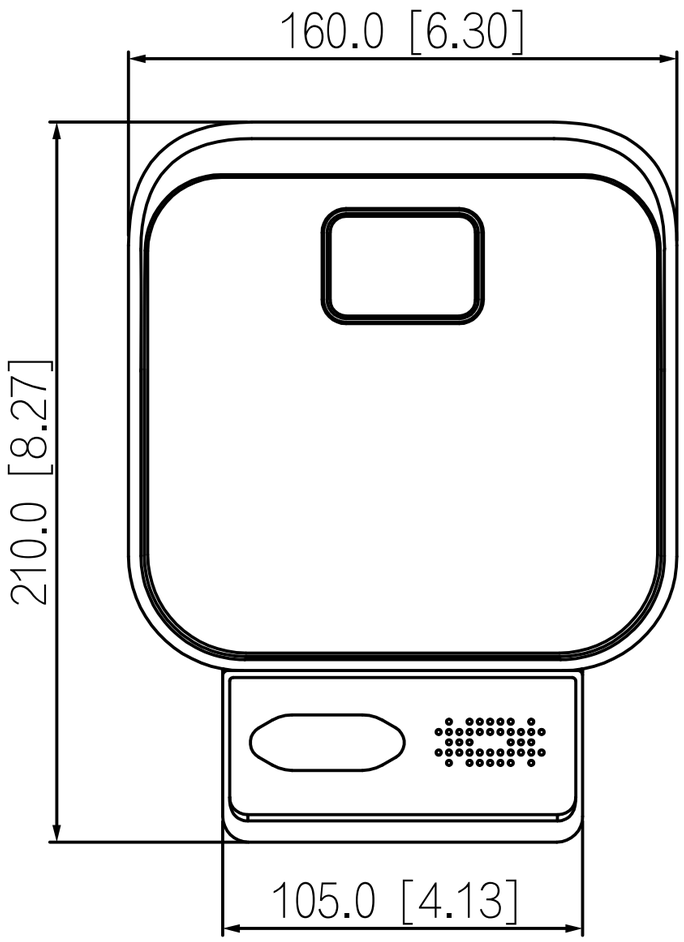
160.0 [6.30]
210.0 [8.27]
105.0 [4.13]

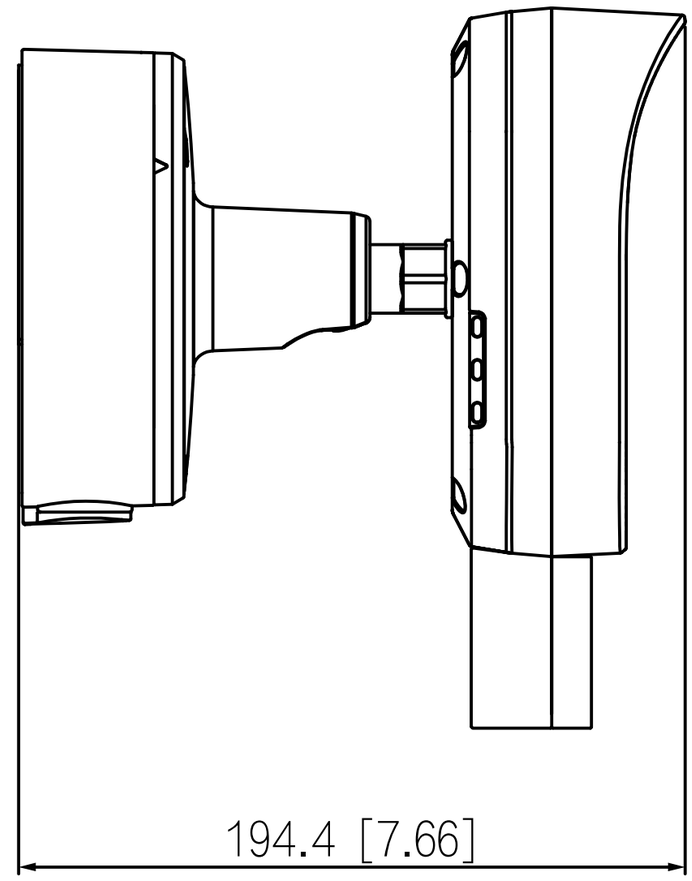
194.4 [7.66]

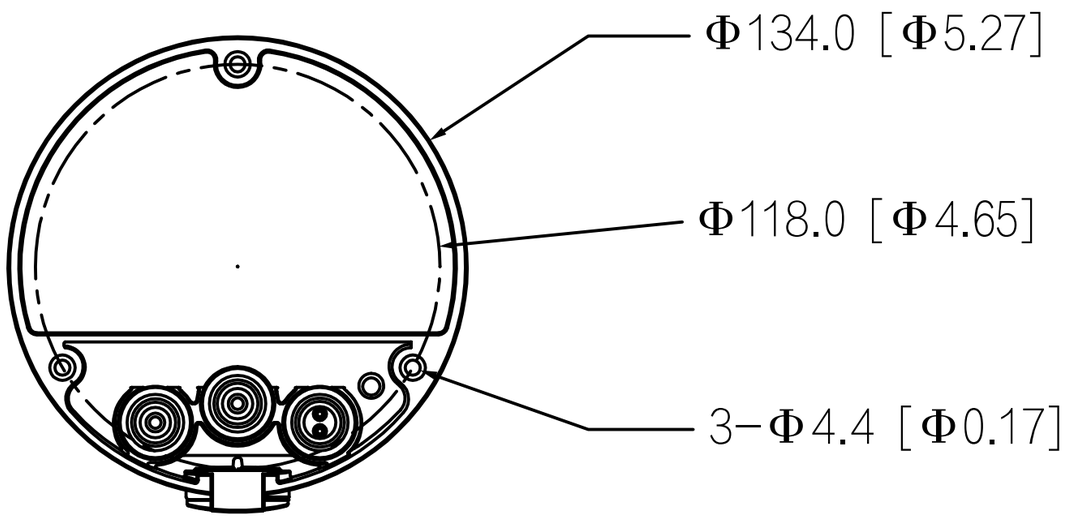
Φ134.0 [Φ5.27]
Φ118.0 [Φ4.65]
3−Φ4.4 [Φ0.17]