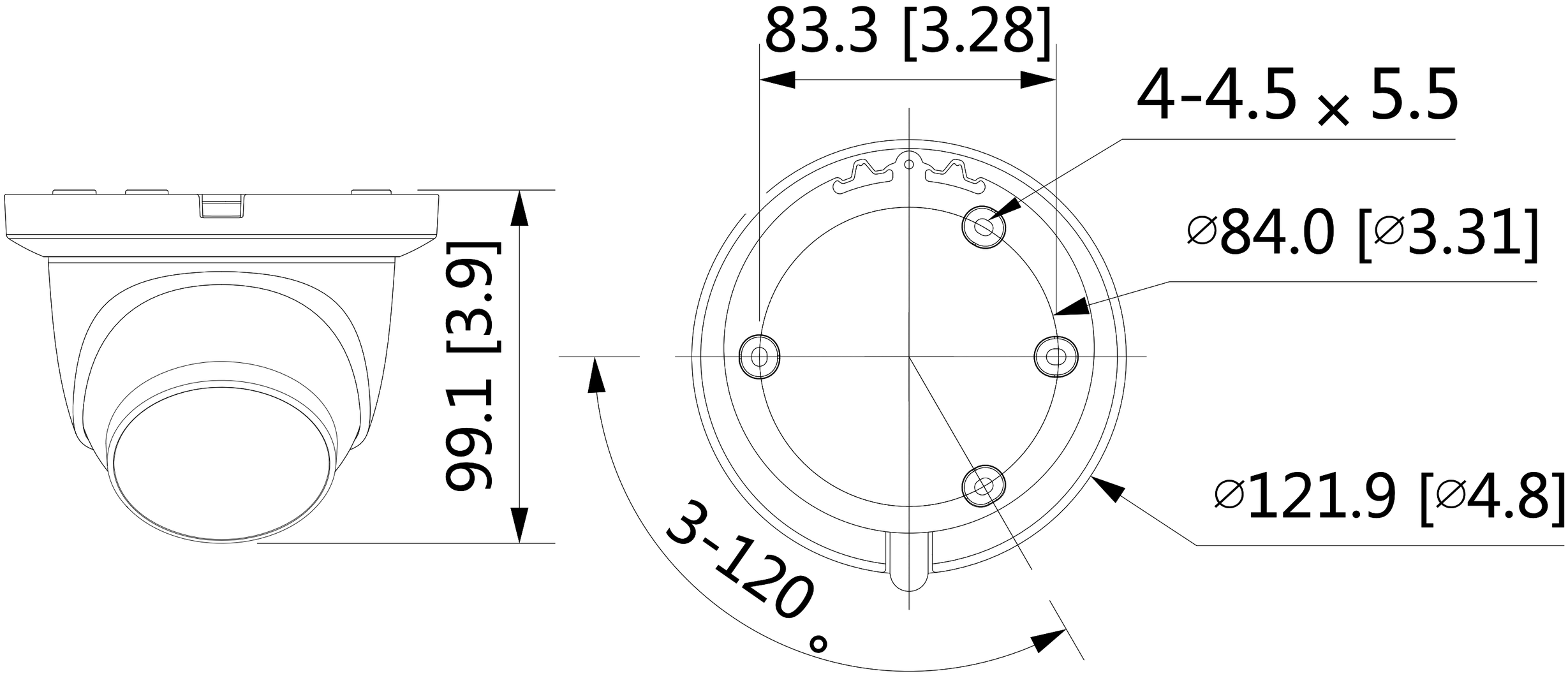
83.3 [3.28]
4-4.5 × 5.5
⌀84.0 [⌀3.31]
99.1 [3.9]
⌀121.9 [⌀4.8]
3-120 °