mm [inch]

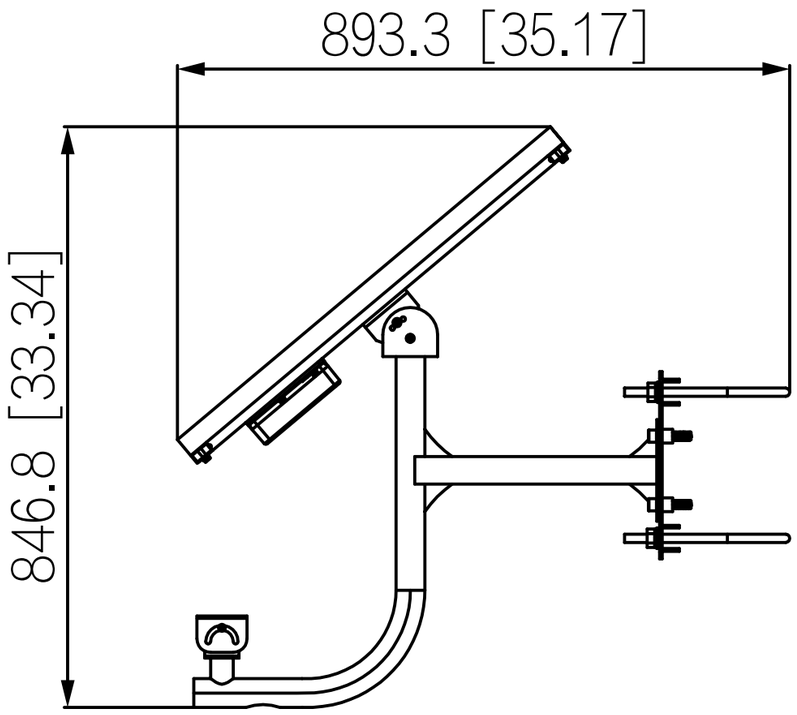
893.3 [35.17]
846.8 [33.34]

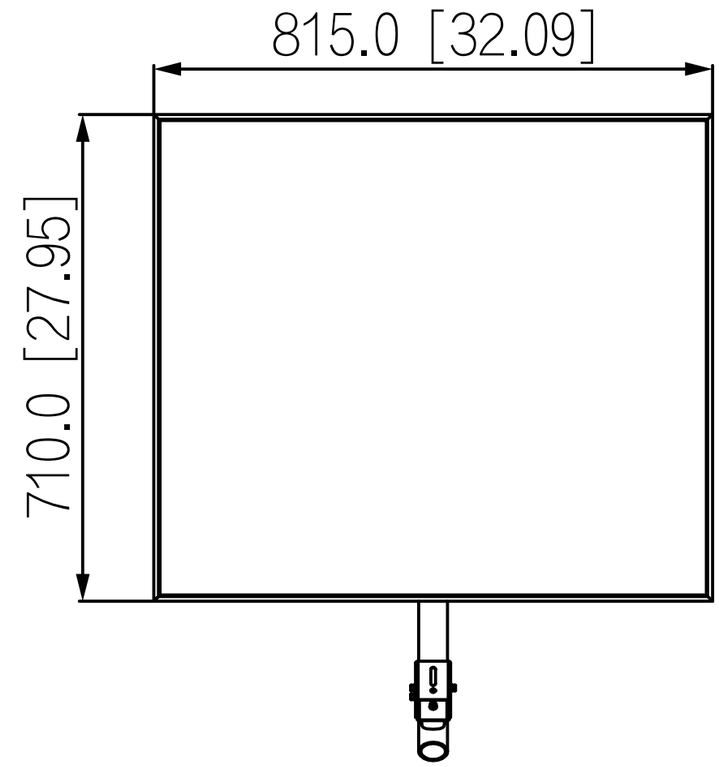
815.0 [32.09]
710.0 [27.95]

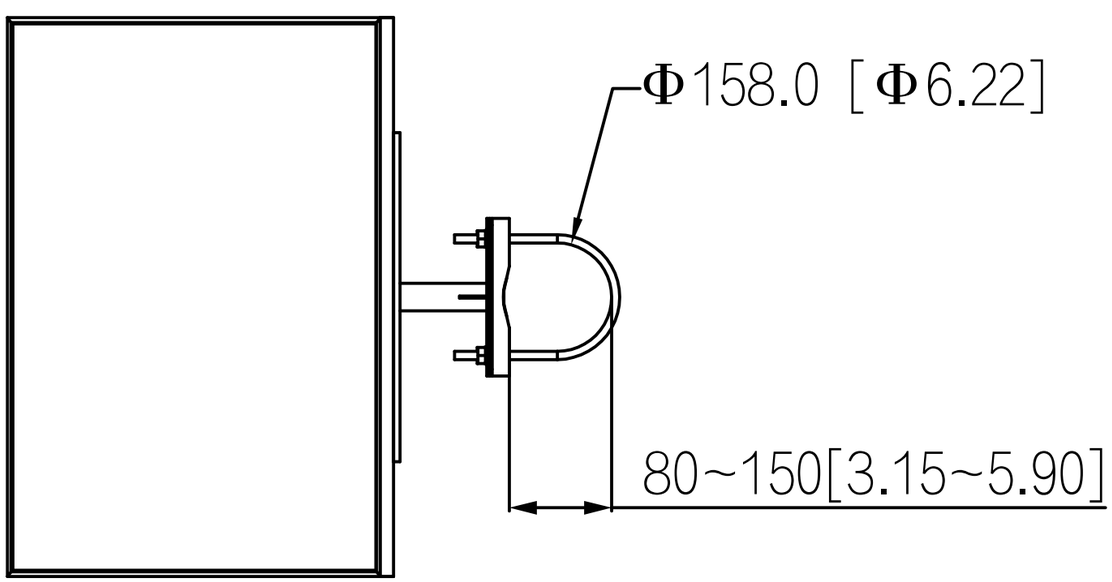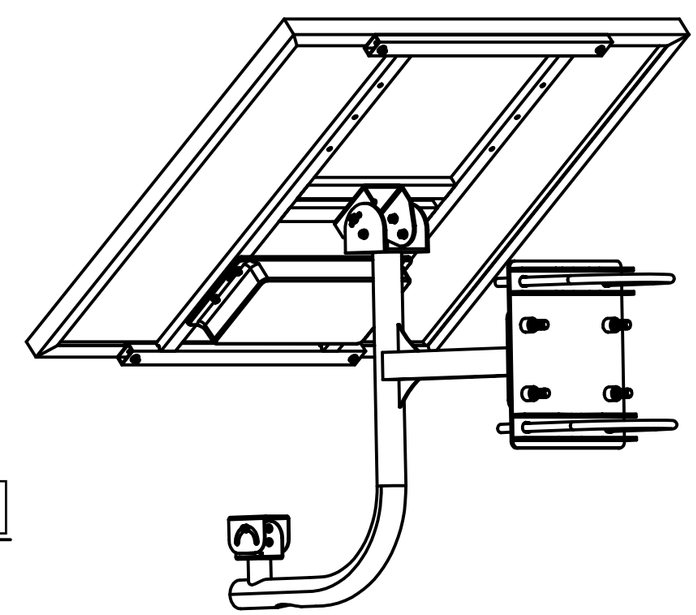
Φ158.0 [Φ6.22]
80~150[3.15~5.90]