mm [inch]

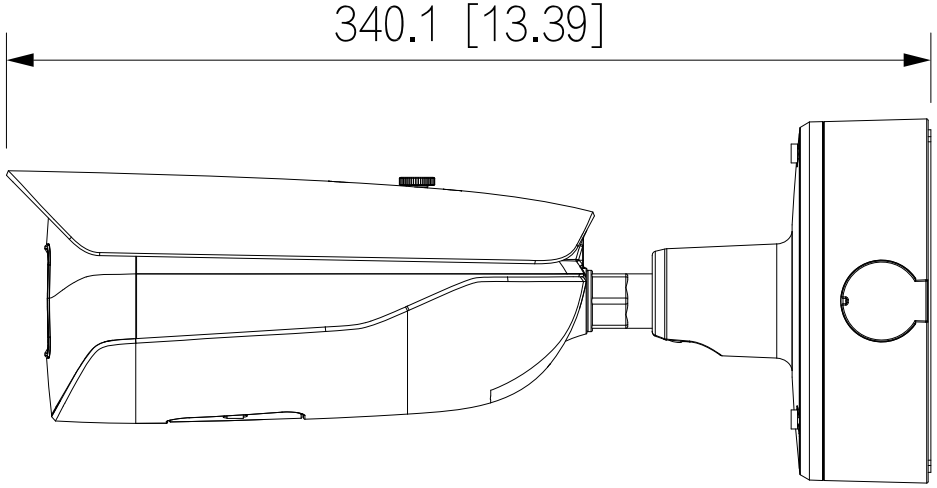
340.1 [13.39]

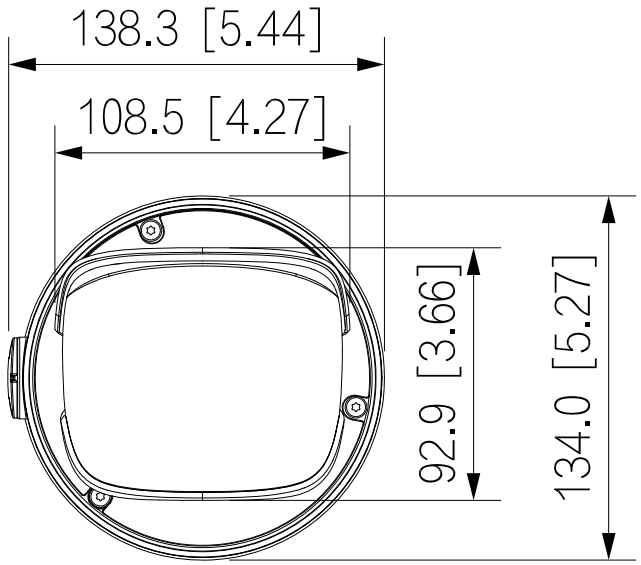
138.3 [5.44]
108.5 [4.27]
92.9 [3.66]
134.0 [5.27]

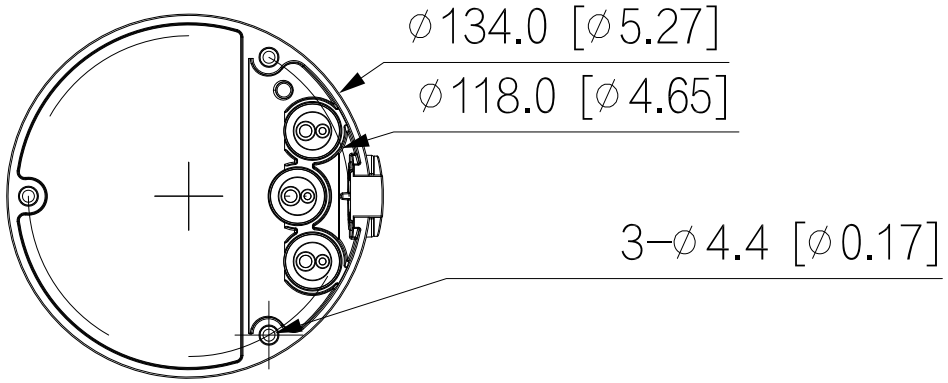
∅134.0 [∅5.27]
∅118.0 [∅4.65]
3-∅4.4 [∅0.17]